FIGURE 1

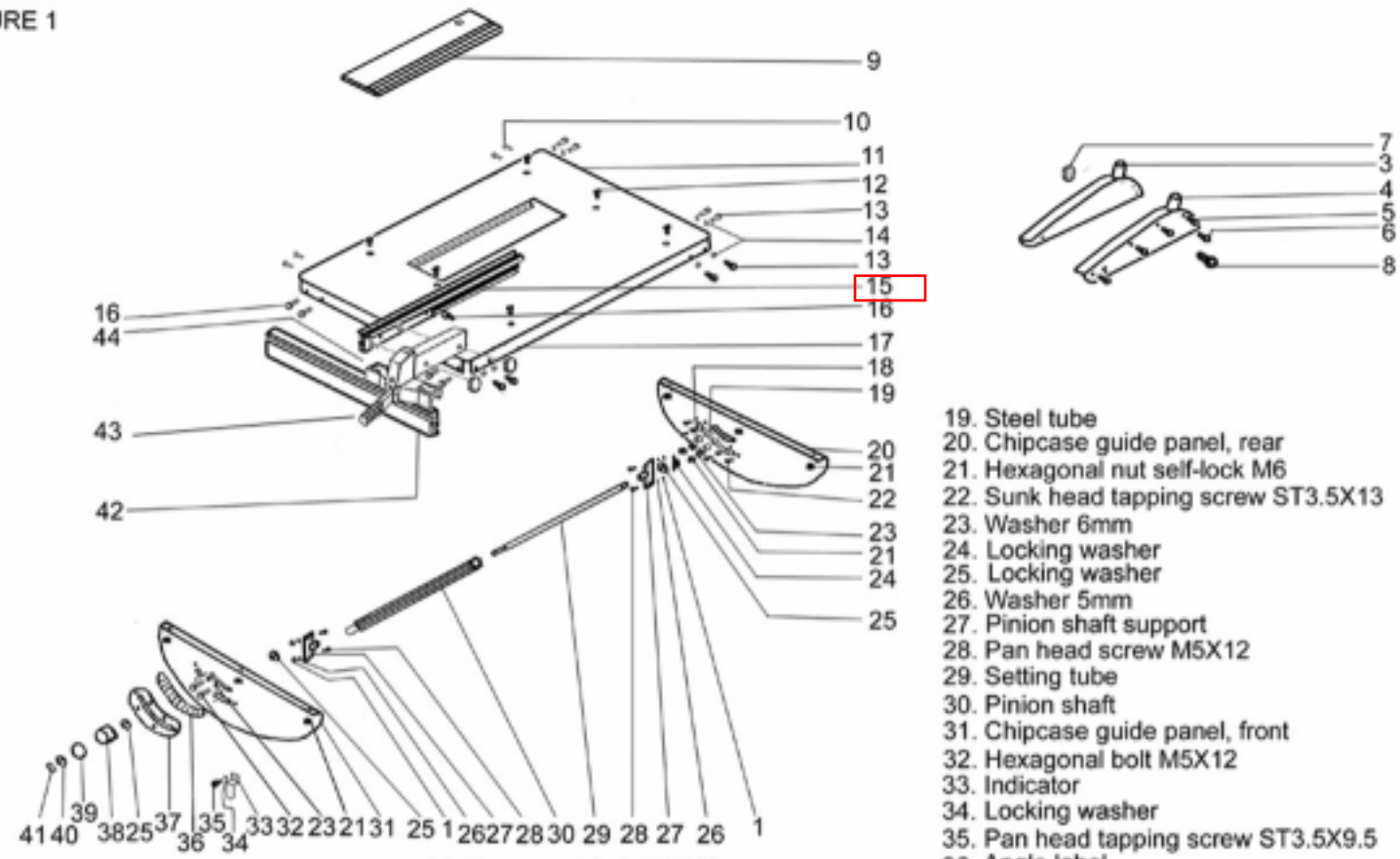

1. Hexagonal nut self-locking M5

3. Blade cover (right)
4. Blade cover (left)
5. Sunk head tapping screw ST3.5X25
6. Sunk head screw M5X30
7. Knurled nut
8. Carriage bolt
9. Table insert

10. Hexagonal bolt M6X12
11. Table top
12. Sunk head screw M6X16
13. Hexagonal bolt M6X16
14. Copper tube
15. Fence extrusion
16. Carriage bolt M6X16
17. Knurled nut
18. Copper tube

19. Steel tube
20. Chipcase guide panel, rear
21. Hexagonal nut self-lock M6
22. Sunk head tapping screw ST3.5X13
23. Washer 6mm
24. Locking washer
25. Locking washer
26. Washer 5mm
27. Pinion shaft support
28. Pan head screw M5X12
29. Setting tube
30. Pinion shaft
31. Chipcase guide panel, front
32. Hexagonal bolt M5X12
33. Indicator
34. Locking washer
35. Pan head tapping screw ST3.5X9.5
36. Angle label
37. Pinion plate
38. Handwheel/blade tilt
39. Angle indicator
40. Adjusting washer
41. Lock lever
42. Rip fence carrier extrusion
43. Rip fence handle
44. Rip fence carrier